KOHLER. Command PRO.

34-40 hp Engines

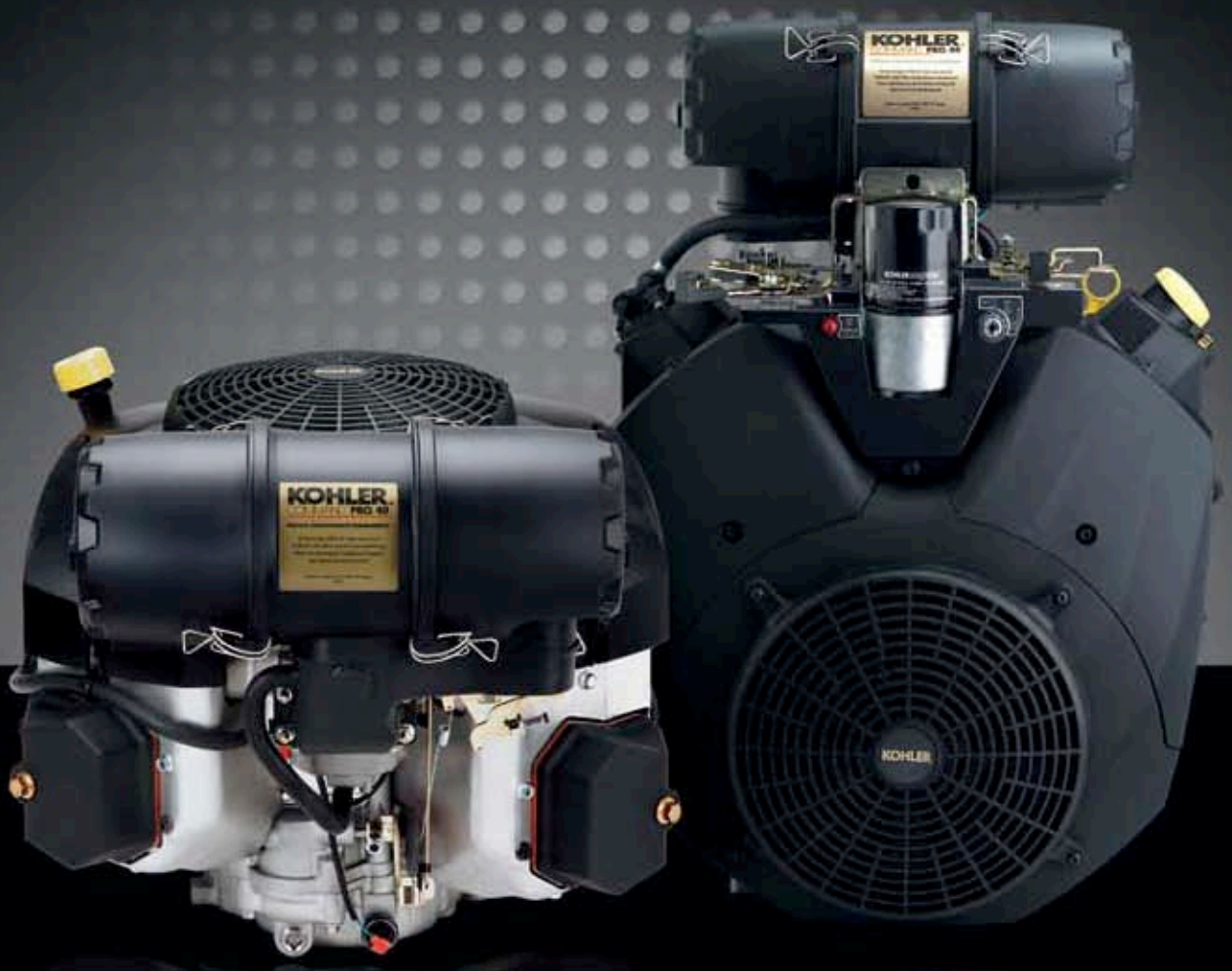

KOHLER.

KOHLER. | PERFORMANCE ENGINEERING

Every part, every component, every system on our engines is guided by Kohler's exclusive Performance Engineering. It's your assurance that every engine we produce will live up to and build upon the worldwide KOHLER® reputation for excellence.

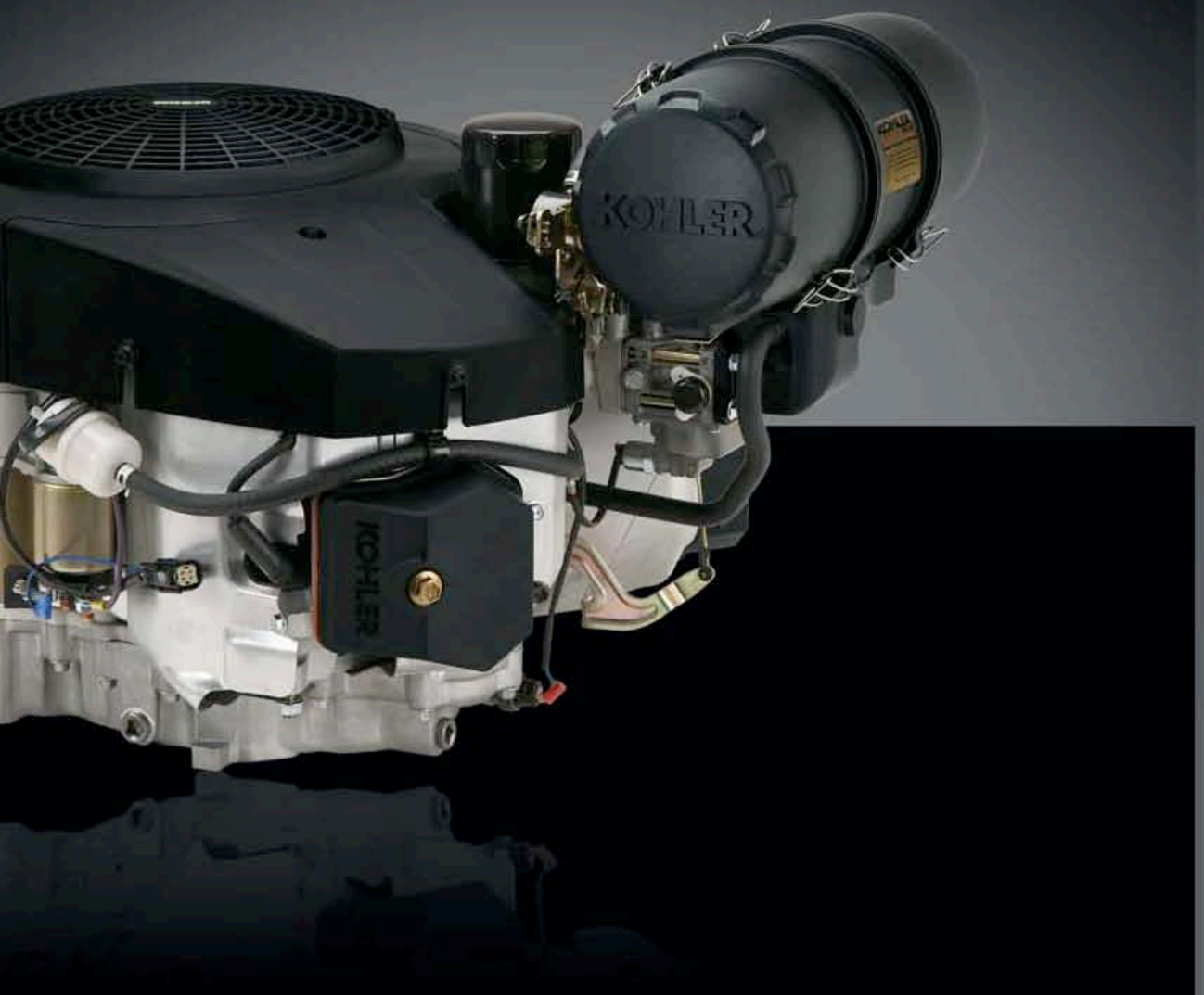

More horses. More power.

KOHLER® Command PRO® engines are the professional standard for power and performance. Whatever the job, whatever the power range, from 34 on up to 40 hp. The Command PRO High-Horsepower Series four OHV models from 34 to 40 hp. – has taken the gasoline engine to new highs for horsepower, torque, reliability and simple, on-site maintenance.

Top-mounted quick change oil filter for clean, easy service.

Easy to reach, easy to change. And since most of the oil is drained before removal, there's no mess. Simple, clean, fast.

Heavy-duty air cleaner with integrated rain cap.

An exclusive KOHLER large-capacity, dual-element design for longer service intervals in the toughest working environments.

Removeable cylinder access covers.

Single-tool removal provides easy access to the entire cylinder, and makes for simple, thorough, regular debris cleaning.

Integrated oil cooler.

Our oil cooler is mounted under the cylinder access cover for a compact engine profile, easier access and cleaning, and superior cooling.

Extra-large sleeve bearings.

Located on both PTO and fly-wheel sides of the engine, these extra sleeve bearings support heavy loads in tough industrial/commercial applications.

Low-profile, high-efficiency air cleaner.

Designed nearly 4" lower for a more compact engine profile, the large-capacity, one-piece element provides extra protection against dust and debris. They feature a ducted intake for reduced sound level and a self-aligning, single-surface seal with retainer for easy, no-tool replacement.

Emissions:
Certified for both EPA and California emissions standards. Precise air-to-fuel ratio for cleaner combustion with optimum horsepower and torque.

Service:
Backed by more than 13,000 dealers and distributors worldwide.

Warranty:
Two-year limited warranty covering all consumer and commercial applications.

KOHLER® COMMAND PRO® ENGINE ARCHITECTURE

FRONT VIEW

34-40 hp horizontal-shaft engines

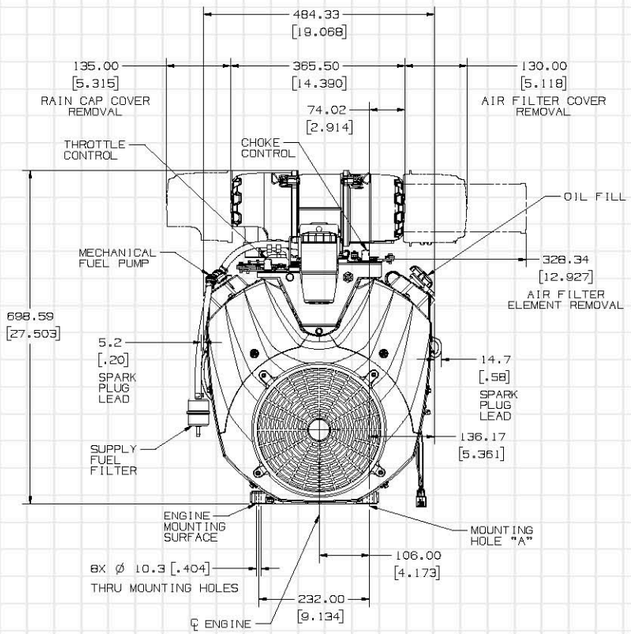

STARTER SIDE VIEW

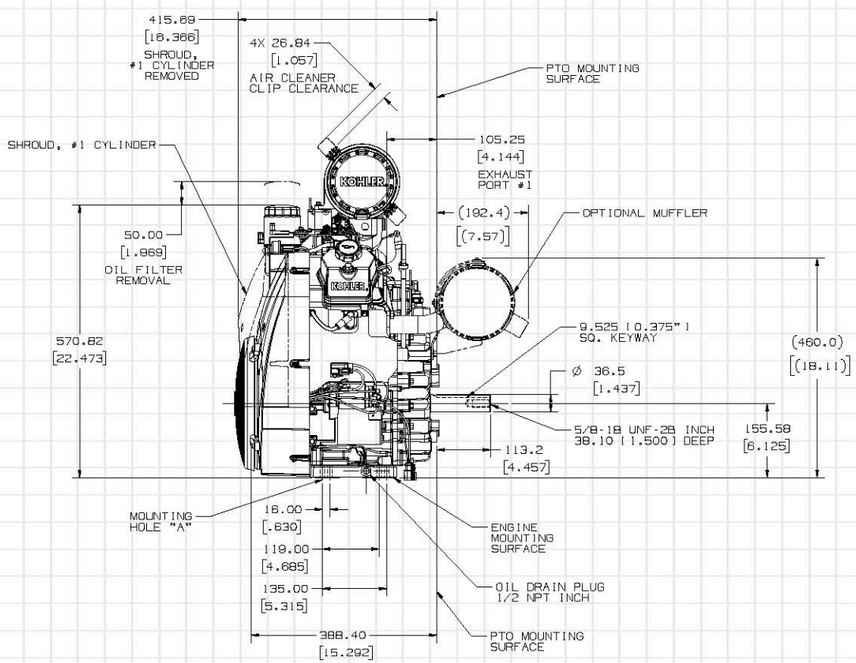

34-40 hp horizontal-shaft engines

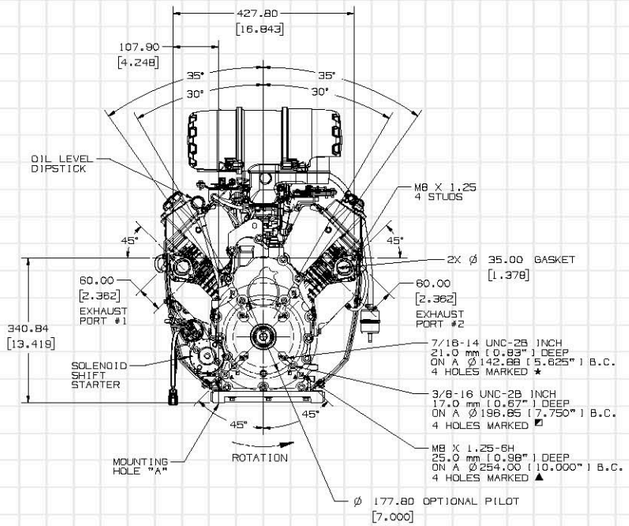

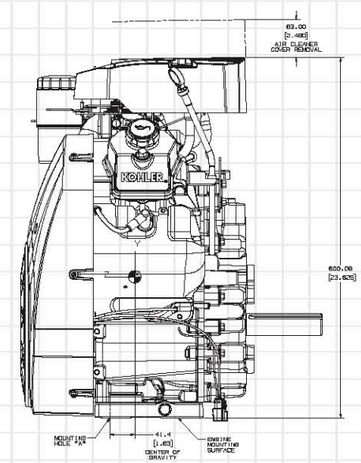

PTO VIEW

STARTER SIDE VIEW AND FLAT AIR CLEANER

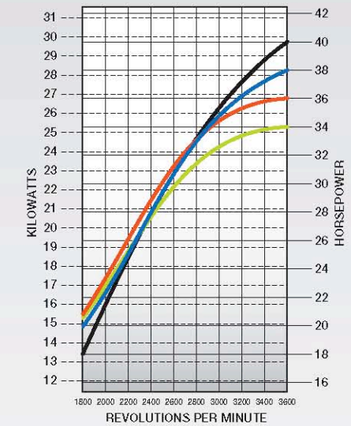

Maximum Power

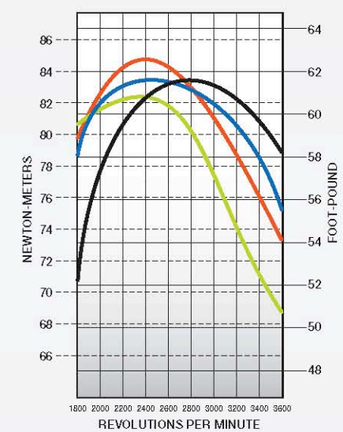

Maximum Torque

- CH/CV1000
- CH/CV980
- CH/CV960
- CH/CV940

KOHLER® COMMAND PRO® ENGINE ARCHITECTURE

OPPOSITE STARTER VIEW ▶

34-40 hp vertical-shaft engines

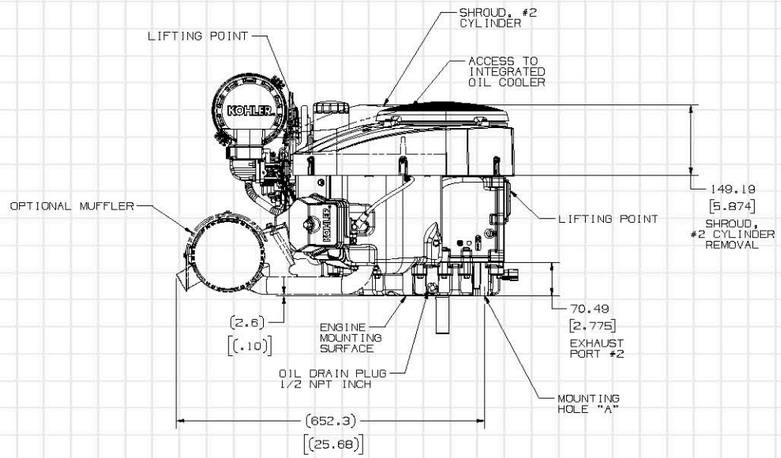

TOP VIEW ▶

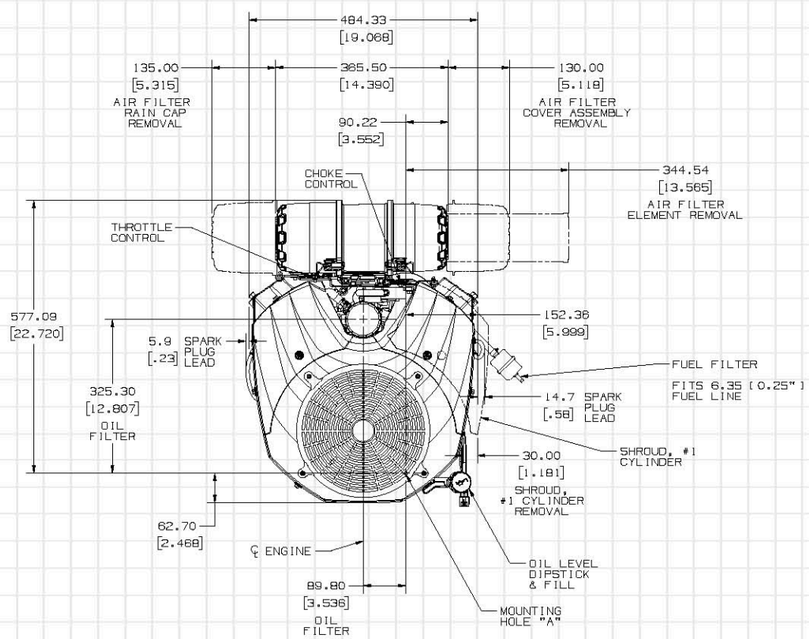

34-40 hp vertical-shaft engines

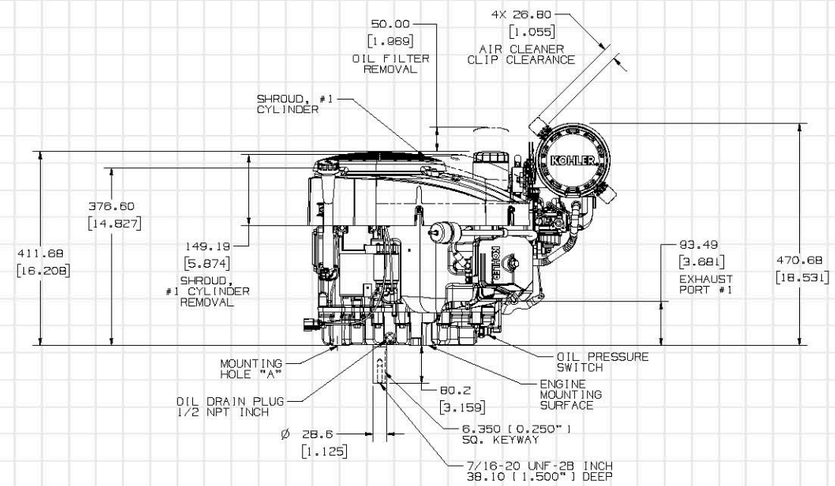

STARTER SIDE VIEW ◀

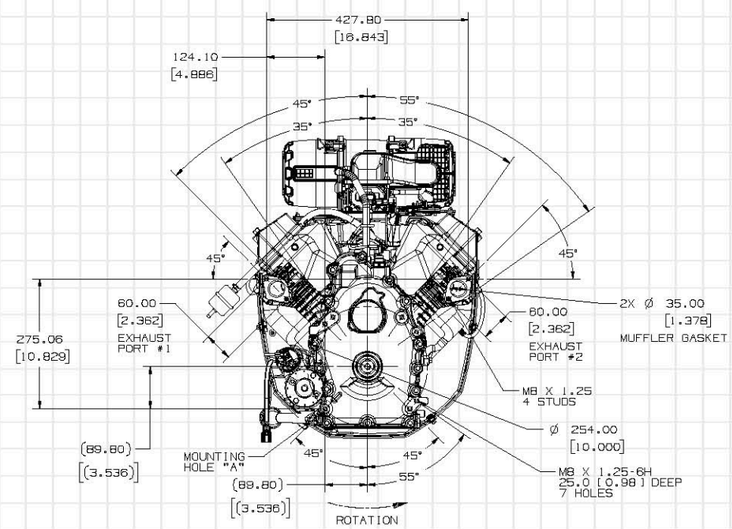

PTO VIEW ◀

KOHLER® Command PRO® Model Specifications

Engine Type		Four-cycle, gasoline, OHV, cast iron cylinder liners, aluminum block, large-capacity air, fuel and oil filters; high-performance spark plugs, two-barrel carburetor, hydraulic valve lifters							
Model		CH940	CV940	CH960	CV960	CH980	CV980	CH1000	CV1000
Power @ 3600 rpm	Maximum hp (kW)	34 (25.4)		36 (26.9)		38 (28.3)		40 (29.8)	
Displacement	cu in (cc)	61 (999)							
Bore	in (mm)	3.5 (90)							
Stroke	in (mm)	3.1 (78.5)							
Peak Torque @ Maximum	ft lb (Nm)	60.7 (82.3) @ 2400 rpm		62.2 (84.4) @ 2400 rpm		61.8 (83.8) @ 2800 rpm		61.5 (83.4) @ 2800 rpm	
Compression Ratio		8.8:1							
Dry Weight	lb (kg)	132 (59)	127 (57)	132 (59)	127 (57)	132 (59)	127 (57)	132 (59)	127 (57)
Lubrication		Pressure lubrication with full-flow filter							
Oil Capacity w/Filter	U.S. qt (L)	2.9 (2.75)	3.1 (2.9)	2.9 (2.75)	3.1 (2.9)	2.9 (2.75)	3.1 (2.9)	2.9 (2.75)	3.1 (2.9)
Dimensions L x W x H	in (mm)	*CH = 15.3 x 19.0 x 27.5 (388 x 484 x 699) **CV = 25.2 x 19.0 x 18.5 (640 x 484 x 470)							

Preliminary Information, subject to change

* L = front to rear of engine W = valve cover to valve cover H = mounting surface to top of air cleaner
** L = blower housing to HD air cleaner W = valve cover to valve cover H = mounting surface to top of air cleaner

Standard Features

- Hydraulic valve lifters for quiet operation, no adjustments
- Nylon cam gear for quiet operation
- High-efficiency fan and screen for superior cooling and longer engine life
- Two-barrel carburetor for high performance
- 20-amp charging, regulated
- Front-mount controls for easy operation and OEM installation
- Yellow oil cap and dipstick service points
- Full-pressure lube with filter and Oil Sentry™ automatic warning/shutdown system
- Large dual drains for faster oil changes
- Hardened crank journals for long life
- Mechanical fuel pump on horizontals, pulse pump on verticals
- 12-volt solenoid shift starter
- Electronic ignition with high-performance spark plugs
- Solenoid fuel shutdown to limit afterbang
- EMC- and RFI-compliant (standard on basic)

Popular Factory Options

- Canister mufflers with right, left and center outlets
- Filter minder for heavy-duty air cleaner
- Guard for rotating grass screen
- Engine-mounted controls (CH)
- Remote oil filter
- Exhaust deflector
- Spark arrestor
- 15- and 25-amp charging systems
- 1⅛- and 1 7/16-inch crankshaft diameter
- Front drive shaft
- Customer mounting pilot (CH)

For more information, contact your KOHLER source of supply
Or call toll-free in the U.S. and Canada 1-800-544-2444.

Kohler Co., Kohler, Wisconsin 53044 Tel 920-457-4441 Fax 920-459-1570

KohlerEngines.com

KOHLER® | Relentless Power. Legendary Performance.

© 2007 by Kohler Co. All rights reserved.

Printed in U.S.A. E-2130 10/07